NOTES

1. THE FINISHED LEVEL OF THE DRIVEWAY AT THE PROPERTY BOUNDARY SHALL BE MAX. 130mm ABOVE TOP OF KERB.
2. WHERE 130mm ABOVE TOP OF KERB CANNOT BE MET ABSOLUTE MIN AT BOUNDARY IS TOP OF KERB (WITH PRIOR WRITTEN COUNCIL APPROVAL).
3. SL72 MESH 25MPa CONCRETE

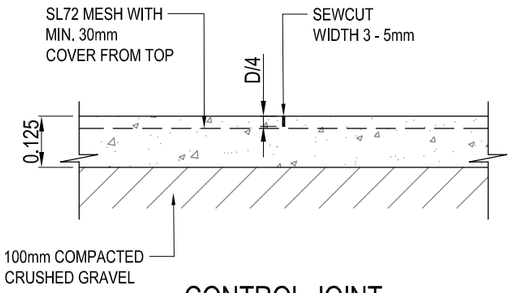

CONTROL JOINT
SCALE 1:15

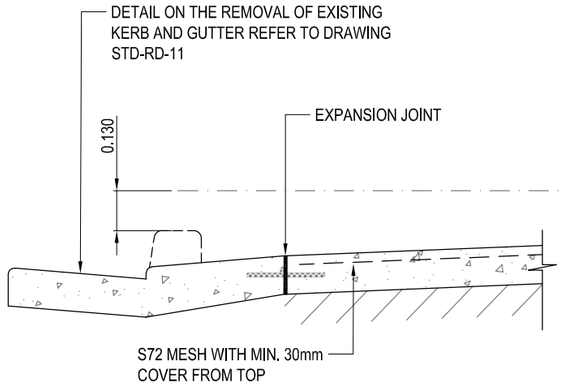

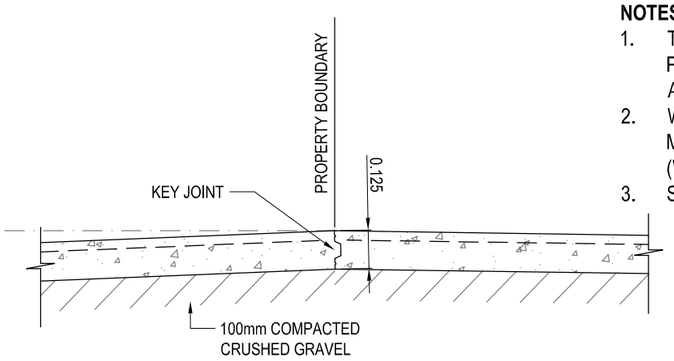

SECTION A
SCALE 1:20

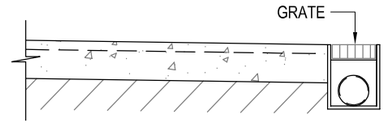

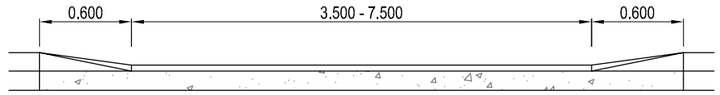

SECTION B
SCALE 1:40

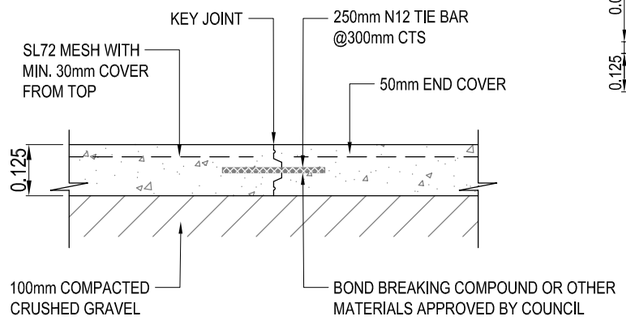

KEY JOINT
SCALE 1:15

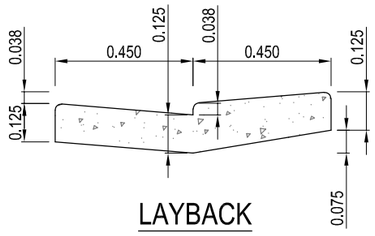

LAYBACK
SCALE 1:20

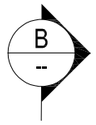

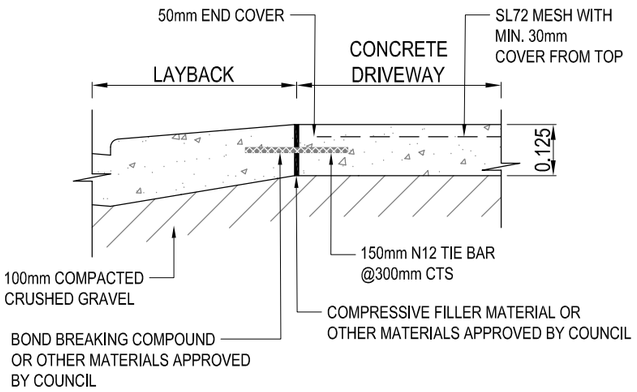

EXPANSION JOINT
SCALE 1:15

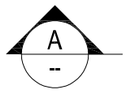

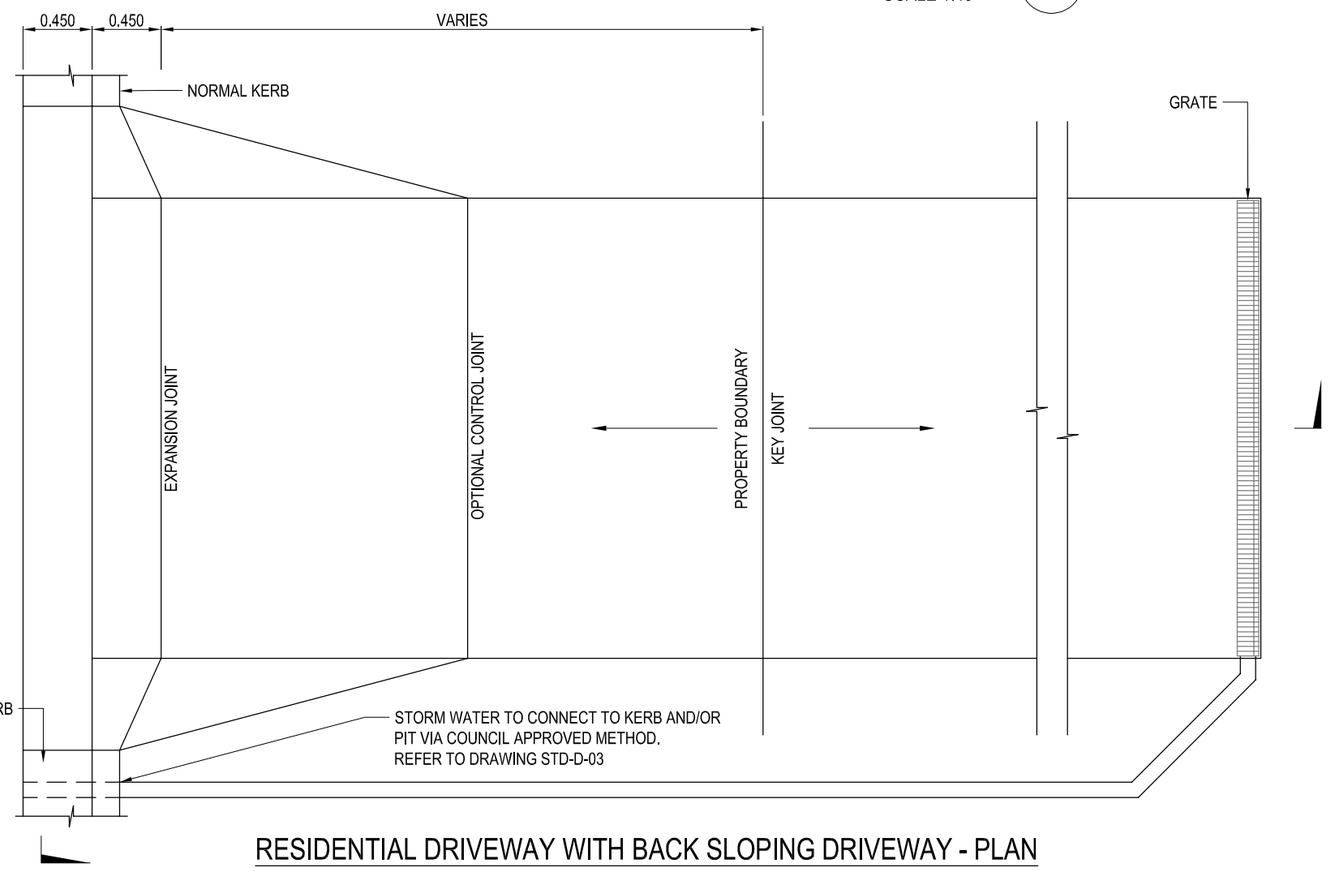

RESIDENTIAL DRIVEWAY WITH BACK SLOPING DRIVEWAY - PLAN
SCALE 1:40

COPYRIGHT
This drawing and the information shown hereon is the property of Griffith City Council and may not be used for any other purpose than that for which this drawing is supplied. Any other use, copying or reproduction of all or any part of this drawing is prohibited without the written consent of Griffith City Council.

REVISION:	AMENDMENT OR REASON OF ISSUE:	ISSUE DATE:	CHECKED BY:	APPROVED FOR CONSTRUCTION BY:
C	AMENDMENT TO DIMENSIONS	06/06/2024	J. CARROZZA	J. RIZZO
B		17/03/2022		
A		13/03/2019		

DESIGNED BY:
DRAWN BY: R. FURORE / F. SANNA
SURVEYED BY:
PROJECT DIRECTOR: G. GORDON

METRES
0.1 0 0.1 0.2 0.3 0.4 0.5
HORIZONTAL SCALE 1:15
0.25 0 0.1 0.2 0.3 0.4 0.5
HORIZONTAL SCALE 1:20
0.5 0 0.5 1
0.25 HORIZONTAL SCALE 1:40

A3 ORIGINAL | CO-ORDINATE SYSTEM: MGA ZONE 55 | HEIGHT DATUM: A.H.D

SURVEY, DESIGN AND DRAFTING SERVICES
ABN: 81274100792
1 Benerembah Street, GRIFFITH NSW 2680
T 02 69620100 F 02 69627181 sdd-mail@griffith.nsw.gov.au

PROJECT TITLE & LOCATION: ENGINEERING GUIDELINES DRAWINGS
SCALE: AS SHOWN
DRAWING TITLE: RESIDENTIAL DRIVEWAY WITH BACK SLOPING DRIVEWAY ARRANGEMENT
JOB NUMBER:
SHEET NUMBER: 1 OF 1
CLIENT: GRIFFITH CITY COUNCIL
DRAWING NUMBER: STD-RD-14
REVISION: C

Project File Location: \\REMUS\Engineers$\FPDes\Engineering Guidelines - 2018 - Draft\Part 2 - Guidelines for Design of Roads\STD-RD-14.dwg